ENERVEX® VENTING DESIGN SOLUTIONS

GENERATOR EXHAUST SELECTION FOR MISSION-CRITICAL FACILITIES

Generator Exhaust Selection for Mission-Critical Facilities

A comparative analysis of traditional sealant-based pressure stack and the graphite-gasket system, prepared for specifying engineers and mechanical contractors serving data centers and other mission-critical facilities.

Executive Summary

Emergency and standby generators are the last line of defense for data centers, hospitals, and other mission-critical facilities. The exhaust stack that serves them is rarely given the same scrutiny as the generator itself — yet it is just as capable of taking a facility offline, or worse, allowing combustion gases to reach occupied space, if it leaks.

Most prefabricated pressure stack sold in the U.S. market today is UL 2561-listed, rated for 1,400°F and up to 60" w.c. of positive pressure, and joined with Ceramic Cement or Silicone sealant in a V-band clamp. These products are code-compliant and widely specified.

They are also, by design and by test history, the most common source of long-term leakage, callbacks, and warranty disputes in generator exhaust systems.

This white paper summarizes why that happens, what the UL testing standards do and do not verify, and how a gasketed joint system addresses the underlying design and installation issues rather than the symptoms. It closes with side-by-side comparisons and specification guidance for engineers and contractors evaluating stack options on mission-critical projects.

1. The Traditional Prefabricated Pressure Stack

Prefabricated stack for generator and boiler exhaust — typically a double-wall, insulated, round assembly — is most often listed to UL 2561, the standard covering 1,400°F chimneys, and rated for up to 60" w.c. of positive pressure. Depending on the application, related listings, such as UL 103, may also apply.

Sections are joined in the field with a V-band clamp. A bead of Ceramic Cement or a Silicone-based sealant is placed in the V-groove of the band, the band is drawn over the mating flanges, and the joint is tightened. Ceramic Cement is a water-based, pre-mixed sealant that must cure — typically a minimum of 24 hours — before the joint can be safely pressurized or placed in service.
Generator Exhaust Selection for Mission-Critical Facilities

Why this matters on a schedule-driven project
On a typical data center or hospital generator installation, dozens of joints must be cleaned, sealed, and cured before startup and commissioning. Cure time is not idle time — it is float that must be built into the schedule, and it is often one of the first things squeezed when a project falls behind.

2. Where Sealant-Based Joints Fall Short

A UL listing confirms that a product met a defined test protocol — it is not a guarantee of lifetime leak-free performance in the field. Three gaps between the listing tests and real operating conditions explain most of the leakage reported in the industry.

2.1 The Joint Is Tested Far Less Rigorously Than The Metal

Using UL 1738 as example, the metal chimney liner undergoes a 10,000-cycle corrosion test, simulating roughly six months (180 days) of exposure to a corrosive condensate mixture to prove resistance to pitting. The joint sealant is held to a dramatically lower bar: a slight positive pressure of about 1.25" w.c., a temperature 70°F above the rated temperature, and a three-hour hold. If the sealant does not crack, soften, or melt within those three hours, it passes.

> *If a chimney system is listed for 300 years of corrosion resistance in the metal, but the sealant that keeps the joint tight is proven for only three hours, the sealant — not the metal — is the weak link.*
>
> Adapted from ENERVEX technical brief,
> "Why Are So Many Listed Chimneys Leaking?"

2.2 Cyclic Thermal Movement Deforms The V-Band Joint

A V-band clamp seats against the flange edge and acts as a wedge. As the joint heats, the flange expands and pushes the V-channel open; on cooling, the channel does not fully spring back. Testing has shown the channel can open permanently by roughly 0.04–0.1 inch (1–2 mm) after repeated heat cycles — loosening the mechanical clamp and compromising the pressure seal it was designed to hold. A generator that starts and stops daily, or several times a day, puts far more thermal cycles through a joint over its service life than the one-time or limited-cycle assumptions built into the listing tests.

2.3 Installation And Curing Are Field-Dependent

Flanges and the V-groove must be solvent-cleaned before every joint is sealed, and the sealant must be cured under the manufacturer's specified conditions — not always achievable on an active job site in cold, wet, or compressed-schedule conditions. Ceramic Cement is also water-soluble and is not intended to be exposed to weather or condensate; hairline cracks that form as it dries out or ages allow flue gas, moisture, and carbon monoxide to escape at the joint.

3. Why It Matters More for Data Centers & Mission-Critical Facilities

The gaps described above are tolerable inconveniences in some applications. In mission-critical generator exhaust, they translate directly into risk:

- Duty-cycle testing. Data centers routinely run weekly, biweekly, or monthly load-bank and exercise cycles in addition to real outages. Each start/stop is a thermal cycle the V-band joint was never proven to survive repeatedly.
- Exhaust intrusion is a life-safety and operations issue. Leakage at a joint near an air intake, louver, or occupied mechanical space can introduce carbon monoxide into areas where personnel work during a generator run — precisely the scenario several engineers and contractors have reported anecdotally after test-firing emergency generators.
- Warranty windows close before problems appear. Ceramic Cement joints often pass a first-year inspection, then develop hairline cracks in year two as thermal cycling continues — after the standard one-year product warranty has expired, leaving the owner, contractor, and specifying engineer exposed.
- Downtime is not an option. Once a leaking joint is discovered on an in-service critical stack, repair typically requires an outage window, scaffolding or lift access, and re-curing time — all difficult to schedule around a live mission-critical load.

> **"We notice exhaust gas smell every time we test fire the emergency generators. This occurs on several installations. We assume this is due to installer errors."**
> — Engineer, Atlanta-area engineering firm
>
> **"Most 5-year-old installations that we visit are leaking."**
> — President, chimney installation contractor

4. SCR Systems And The Stack's Pressure Budget

A growing number of standby and emergency generators serving data centers now carry Selective Catalytic Reduction (SCR) systems to meet NOx limits, particularly in air-quality non-attainment areas and jurisdictions tightening diesel emissions rules for backup power. An SCR system is not a passive add-on to the exhaust path: the catalyst substrate, the DEF/ammonia injection and mixing section, and the straight-run ductwork the catalyst needs upstream and downstream to work effectively all add real, fixed backpressure ahead of the stack.

That matters because every engine has a maximum allowable exhaust backpressure, and the stack has historically been treated as the minor contributor to that budget — a comfortable design margin. Once an SCR system claims a meaningful share of that same budget, the stack is no longer sized with slack; it is sized at, or close to, the edge of what the engine and the stack joint can tolerate. That shift changes what "good enough" looks like for the stack and its joints: a diameter, length, or elbow count that was conservative on a non-SCR system can become marginal once the catalyst is in the path, and any additional resistance from a partially restricted or fouled joint eats directly into whatever margin is left.

And because the system now runs closer to its rated limits, the kind of joint movement or hairline cracking described in Section 2 stops being a slow, tolerable leak and starts being something that shows up as a backpressure alarm, a derate, or a failed commissioning test. Our recommendation: where SCR is part of the design, the stack's pressure loss — and the joint system's pressure-holding integrity — should be evaluated against the full engine-plus-catalyst backpressure budget, not the engine alone, and the joint should be treated as a reliability component of that budget rather than an afterthought to it.

5. A New Approach to Joints

New technology from ENERVEX replaces the sealant-and-V-band joint with a bonded graphite gasket, reinforced with a thin stainless-steel foil layer, compressed by a purpose-built U-band clamp. The gasket is factory-bonded to the male flange end of each section, so there is no field-applied sealant, no cleaning of flanges or grooves, and no cure time before the joint can be placed in service.

5.1 Why Graphite

Graphite brings a combination of properties that sealants cannot match in a sealed, high-temperature, condensate-exposed joint: it is relatively soft and conformable, dimensionally stable over long service life, resistant to thermal shock, largely impermeable to gases and liquids, chemically inert, and unaffected by acidic condensate. A 0.08-inch graphite/foil gasket is rated across a temperature range of roughly –328°F to +1,832°F and positive pressures up to 2,000 psi — far beyond what a chimney application demands, which is the point: the joint is no longer the limiting component.

5.2 Why The U-Band Matters As Much As The Gasket

Where a V-band wedges against the flange edge and can deform under cyclic heating, the U-band compresses the gasket along the sides of the flange. Thermal expansion of the inner liner is absorbed inside the U-channel itself, without deforming the band, the flange, or the gasket, and without transmitting additional stress back into the joint. The result is a joint that behaves consistently on cycle 1 and on cycle 10,000.

These images show the movement of the flanges within a **V-Band.**

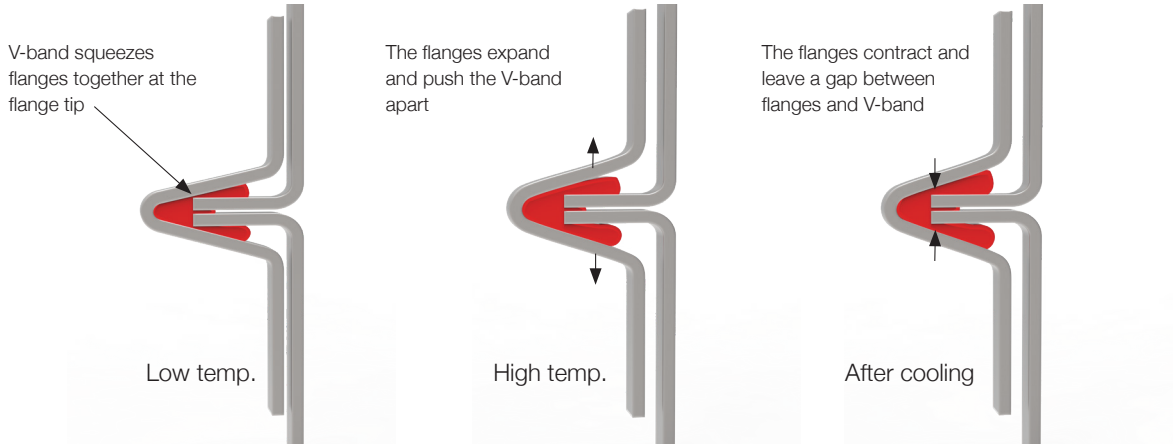

– and these show the movement of the flanges within a **U-Band.**

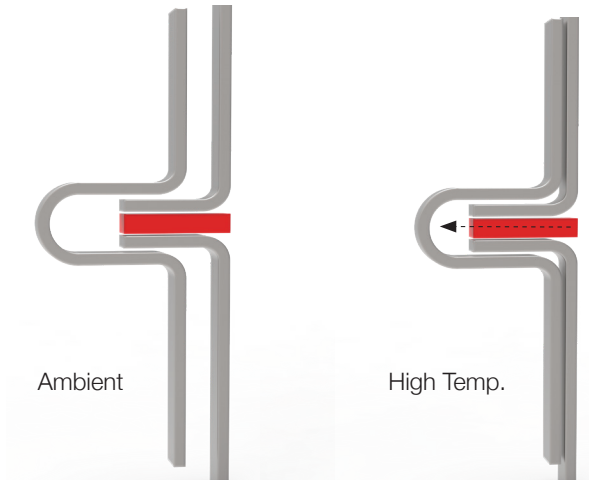

5.3 Independently Verified Performance

In 2014, ENERVEX partnered with Underwriters Laboratories to directly compare graphite-gasket joints against UL-listed Silicone and Ceramic Cement joints on the same chimney product, using identical, correctly cleaned and cured control joints for the sealant tests. The witnessed results:

UL Witnessed Leakage Test	Graphite Gasket	Cement / Silicone	Improvement
UL 2561 Sec. 19 — Ambient (ppm)	0.481	3.536	**86% lower**
UL 2561 Sec. 19 — After 1400°F (ppm)	3.895	21.391	**82% lower**

Putting these numbers in a regulatory context: OSHA's Permissible Exposure Limit (PEL) for carbon monoxide in the general workplace is 50 ppm as an 8-hour time-weighted average (29 CFR 1910.1000, Table Z-1). That figure is an occupational-exposure limit — the average CO concentration a worker may legally breathe over a full shift — and is not the same measurement as the UL joint-leakage rate above, which quantifies how much flue gas escapes a test joint under controlled pressure, not the resulting concentration in a room.

The two are nonetheless connected in practice: every joint in a genset enclosure, plant room, or shaft is a potential contributor to ambient CO, and that contribution compounds across the dozens of joints in a typical stack, particularly during test-fire and load-bank runs when technicians are working in or near the equipment room.

A joint system documented at 82–86% lower leakage lowers that contribution at the source, which is the more reliable strategy where ventilation, enclosure volume, or run duration cannot be guaranteed to keep ambient CO safely under the 50 ppm PEL on their own.

Because published pressure ratings for prefabricated stack often do not extend to adjustable and variable-length sections — language such as "evaluated," "confirmed," or "estimated" in an installation manual does not carry the same weight as "listed" — PowerStack's full 60" w.c. / 1,400°F listing across all components (except variable lengths), including adjustable lengths, closes a gap that specifying engineers frequently do not realize exists until it is discovered in the field.

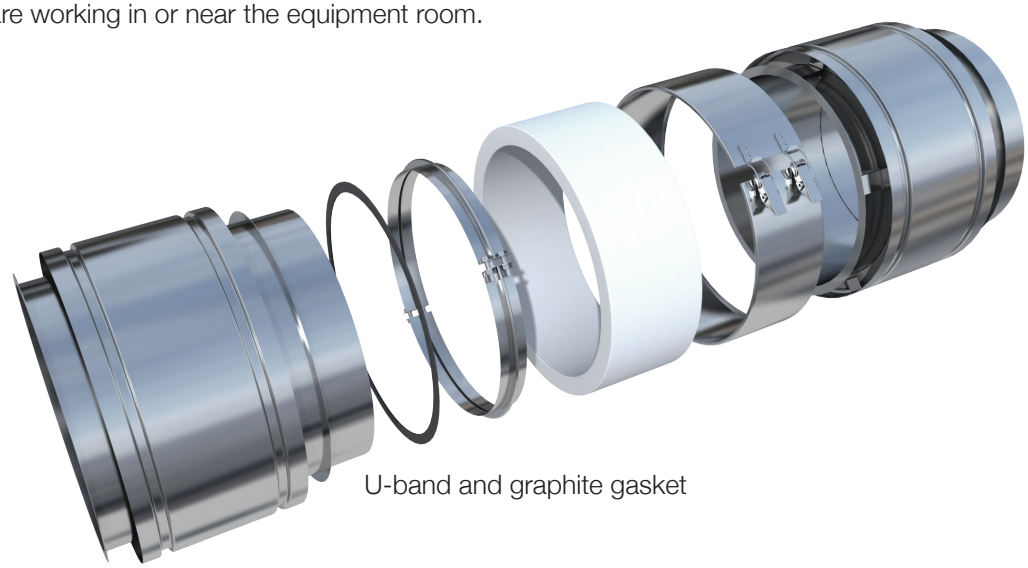

U-band and graphite gasket

6. Side-by-Side Comparison

Attribute	Traditional Prefab Stack (Sealant / V-band)	Graphite Gasket / U-band
Joint sealing method	Silicone or Ceramic Cement, hand-applied in V-band groove	Bonded graphite/stainless-foil gasket, factory-fitted; no sealant
Field cure time	Minimum 24 hours before joint may be pressurized/used	None — no curing step required
Field cleaning of joint	Flanges & V-groove must be solvent-cleaned before every joint	Not required
Thermal-cycling durability	V-band can permanently deform 0.04–0.1" after repeated heating/cooling; hairline cracks common in Ceramic Cement	U-band/gasket design absorbs expansion without deforming the band, flange, or gasket
Condensate/moisture resistance	Ceramic Cement is water-soluble and degrades on contact with condensate	Graphite is inert and immune to breakdown by even acidic condensate
Adjustable/variable length pressure rating	Typically NOT separately listed; often de-rates the entire system (e.g., 60"WC system reduced to ~6"WC)	Adjustable lengths UL-tested to the full 60"WC / 1400°F rating
Documented leakage performance	Baseline (higher leakage in UL-witnessed testing, see Section 5)	Up to 86% lower leakage in ambient tests and 67–82% lower under high-temperature/high-pressure conditions vs. Ceramic Cement and Silicone
Installed cost	Lower material cost	Slightly higher material cost
Installation time / labor	Slower — cleaning, sealant application, and mandatory cure time add schedule days	Faster — no cleaning, no sealant, no cure wait; fewer field variables
Warranty	Typically 1 year	5-year leakage warranty and performance guarantee

7. Cost and Schedule: The Real Trade-Off

Graphite gasketing is not the lowest first-cost option. Material cost typically runs slightly higher than a comparable traditional prefabricated stack. For a specifying engineer or contractor evaluating total installed cost — not just line-item material price — that premium should be weighed against several offsetting factors:

- No field cure time. Traditional Ceramic Cement joints require a minimum 24-hour cure before use; on a stack with dozens of joints, that adds real calendar days that dry-gasket joints do not require.
- No field cleaning or sealant application. Eliminating the solvent-cleaning and sealant-application steps at every joint reduces field labor hours and removes a common source of installation error.
- Fewer weather and workmanship variables. A bonded, factory-fitted gasket is far less sensitive to field conditions (temperature, moisture, installer technique) than a messy hand-applied wet sealant.
- Lower callback and warranty exposure. A 5-year leakage warranty and performance guarantee, versus a typical 1-year warranty on sealant-based systems, shifts risk away from the contractor and specifying engineer during the years when Ceramic Cement joints most commonly begin to crack.
- Avoided commissioning delays. Because no cure time is required, startup and commissioning — often the most schedule-constrained phase of a mission-critical project — is not held hostage to sealant cure windows.

On a project where schedule float is scarce or where the cost of a delayed go-live (or of an unplanned outage years later) materially exceeds the stack's material cost, the premium is frequently recovered well before the warranty period ends.

On projects where budget is the dominant constraint and generator duty cycles are light, a traditional sealant-based stack may remain an appropriate choice — provided the limitations in Sections 2 and 3 are understood and accepted by the owner.

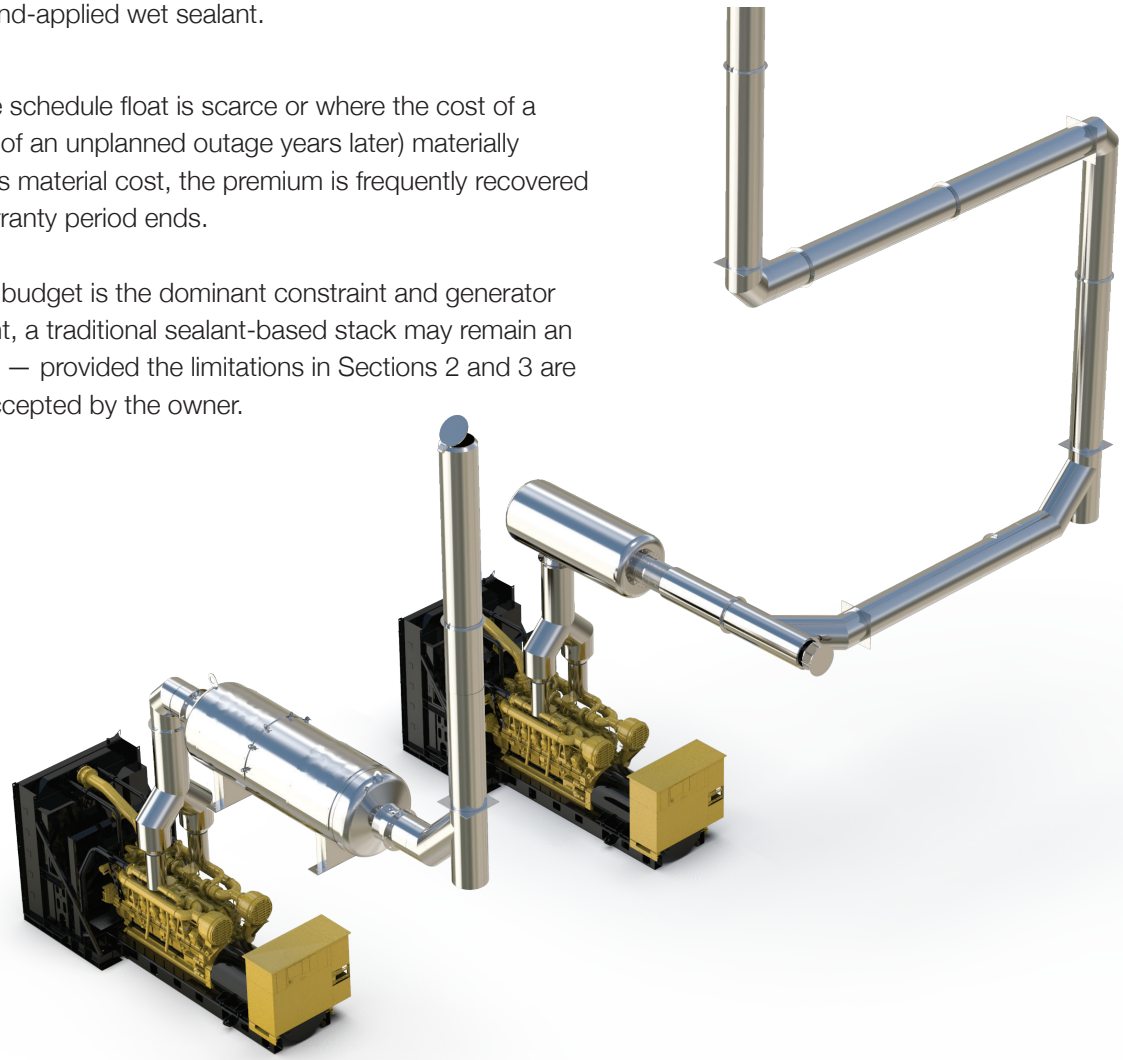

8. Recommendations for Specifying Engineers

A UL 103 or UL 2561 listing alone is not sufficient assurance of leak-free performance over the life of a mission-critical generator stack. When writing the specification:

- Specify the joint assembly method explicitly — not just the chimney listing. State whether a gasketed (sealant-free) joint is required or acceptable.
- Confirm the pressure rating of adjustable and variable-length sections independently — request the manufacturer's listing documentation for these components specifically, not just the straight-length rating.
- Ask for cyclic (repeated heat/cool) test data on the joint, not only single-exposure test data, particularly for generators with frequent start/stop duty cycles.
- Align warranty length with the facility's risk tolerance and evaluate total installed cost — including schedule impact of cure time, cleaning labor, and callback risk — not material cost alone. A 1-year sealant warranty rarely covers the period when Ceramic Cement cracking is typically discovered.

> A UL103 or UL2561 listing is no guarantee of a leakage-free chimney. The specifying engineer must define the joint assembly method, along with temperature and pressure ratings, in the specification itself.

9. Recommendations for Mechanical Contractors

- Build sealant cure time into the schedule as a hard constraint, not a buffer — pressurizing or testing early is a common source of early-life leaks. Document flange/V-groove cleaning and sealant application on every joint; incomplete cleaning is a frequent, largely invisible root cause of callbacks.
- Where a gasketed system is specified, don't carry traditional-stack habits over out of routine — the PowerStack workflow is intentionally simpler, and skipping steps that aren't required isn't the same as skipping steps that are.
- Flag adjustable/variable-length sections during submittal review; confirm their listed pressure rating matches the system rating before installation, not after.

10. Conclusion

Prefabricated, sealant-jointed pressure stack has a long track record and remains code-compliant for many applications. But the testing standards behind that listing were not written with today's high-cycle, mission-critical generator duty in mind — and the joint, not the metal, is consistently where these systems fail. For data centers and other facilities where an exhaust leak carries life-safety, compliance, and uptime consequences, the joint technology deserves the same specification-level attention as the generator itself.

The ENERVEX PowerStack system — a bonded graphite gasket in a U-band clamp, listed to a true 60" w.c. positive rating on every component including adjustable lengths — addresses these failure modes directly: no field curing, no field cleaning, documented cyclic durability, and verified leakage rates 67–86% lower than Silicone or Ceramic Cement. Despite a slightly higher cost, it is a faster install and is worth evaluating wherever the stack cannot be allowed to fail quietly.

Sources: ENERVEX Inc., "Why Are So Many Listed Chimneys Leaking?" technical brief (UL103, UL1738, UL2561 test data and joint design analysis); ENERVEX/UL joint leakage-rate testing, February 2014; ENERVEX PowerStack product listing summary.